This document contains the proprietary information of Tandemloc, Inc. and your access and use shall be, and is at all times, pursuant to and limited by the Tandemloc, Inc. Terms of Use.
You shall not , and shall not encourage, assist, or authorize another party to copy, distribute, publicly display, modify, reverse engineer, decompile, or take any other action to reproduce this document or the information contained herein.

©2019 by Tandemloc, Inc.
Dimensions are subject to manufacturing tolerance and change.

REVISIONS			
REV	DESCRIPTION	DATE	APPROVED

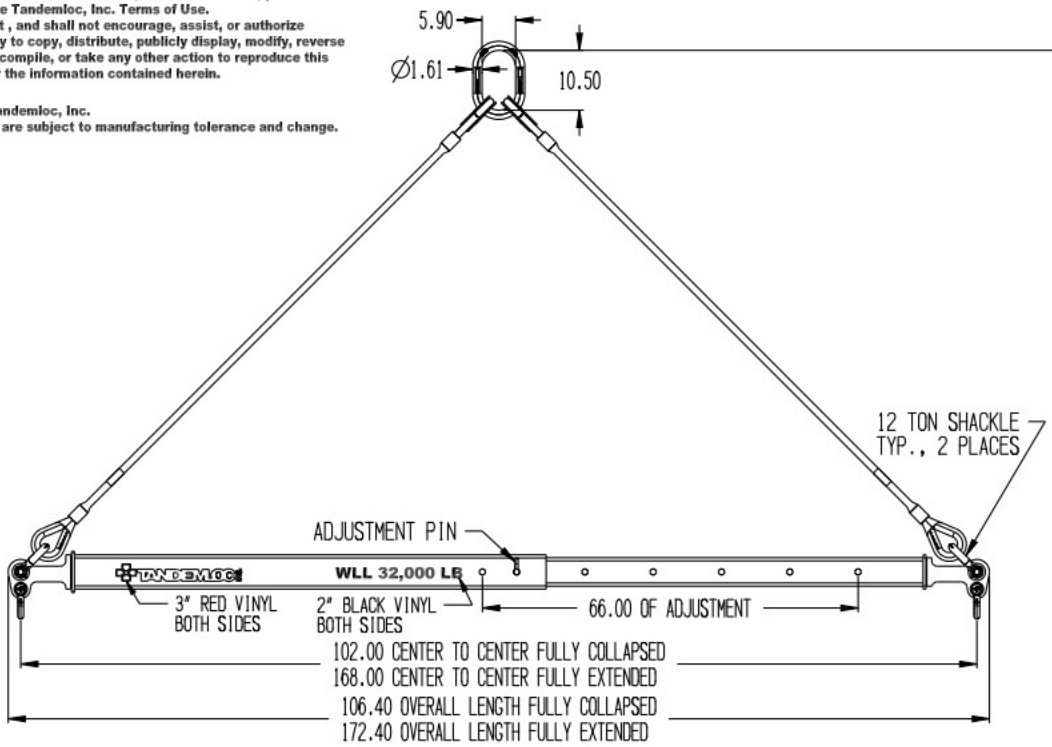

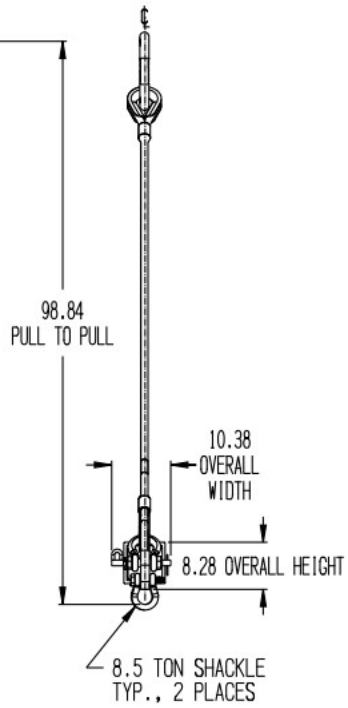

NOTES:
1. PART NO.: AT14A032-168-PA, 102"-168" TELESCOPIC SPREADER
   AT14A032-168SPA, 102"-168" TELESCOPIC SPREADER WITH TOP SLING
2. WLL: 32,000 LB. @ 45° MINIMUM
3. PROOF TESTED TO 125% (40,000 LB.) AND CERTIFIED
4. STANDARD SPECIFICATION # EAD21000A APPLIES
5. FINISH: SANDBLAST AND PRIME AND PAINT YELLOW
6. CALCULATED WEIGHT: 434 LB. SPREADER WITH SLING: 534 LB.
7. DESIGNED AND MANUFACTURED TO MEET OR EXCEED
   ASME B30.20 AND BTH-1, DESIGN CATEGORY B, SERVICE CLASS O.

** DO NOT SIGN IF CHANGES ARE REQUIRED **
CUSTOMER APPROVAL: _____
DATE: _____

☒ "X" DENOTES APPLICABLE DATA
UNLESS OTHERWISE NOTED, DIMENSIONS ARE IN INCHES & TOLERANCES ARE:
.XX ±.06 .XXX ±.030
.XXX ±.03

THIS DOCUMENT CONTAINS DATA WHICH MAY BE EITHER PATENTED, PATENT PENDING OR IS THE PROPERTY OF TANDEMLOC, INC. DISCLOSURE, OR COPYING WITHOUT THE WRITTEN AUTHORIZATION OF TANDEMLOC, INC. IS EXPRESSLY PROHIBITED.

☐ "X" DENOTES APPLICABLE DATA
COST MAX CASTING TOL. IS:
0 TO 4" ±.030 , 4.01" TO 7" ±.039"
7.01" TO 10.5" ±.045"
OVER 10.5" ±.052"

APPROVALS	DATE
DRAWN DHI	11-30-18
JHL	12-3-18

TANDEMLOC

TITLE AT14A032-168-PA 102"-168" TELESCOPIC SPREADER

SIZE	CAGE CODE	DWG NO.	REV.
D	65059	SAT14A032-168-PA	-

SCALE | SHEET 1 OF 1